Form NE3-001

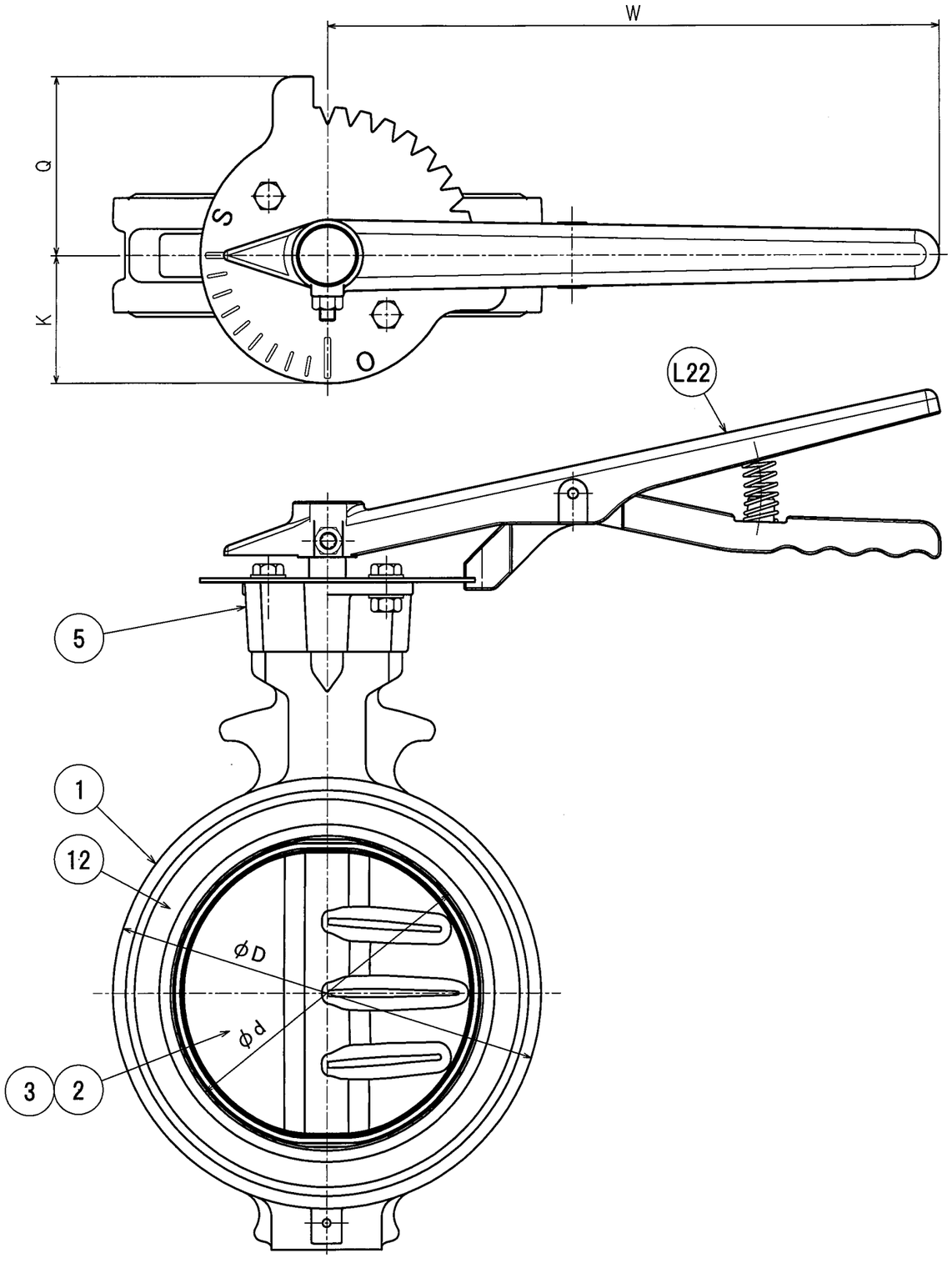

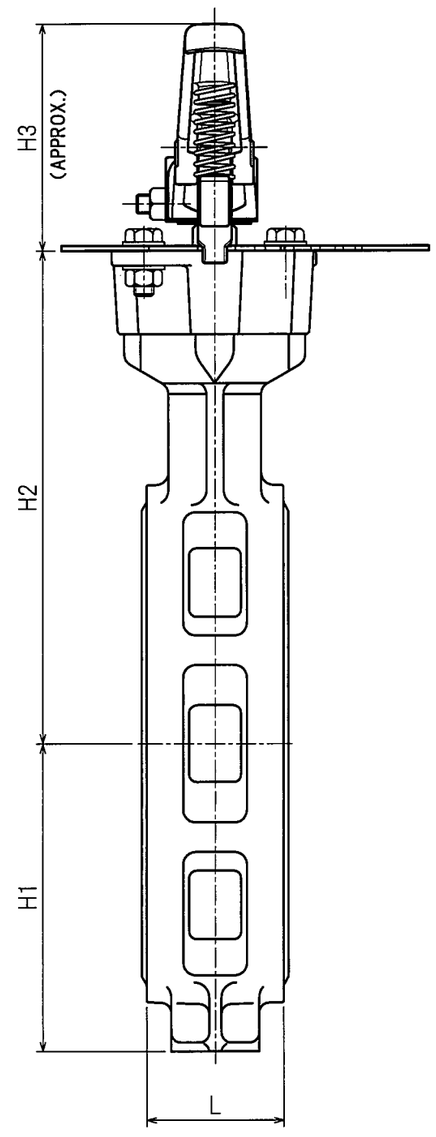

SIZE inch	SIZE mm	d	L	D	H1	H2	H3	Q	K	W	WEIGHT APPROX. (kg)
6B	150	153.5	56	210	125	201	94	88	63	300	5.0

MAXIMUM PERMISSIBLE WORKING PRESSURE
1.0 MPa

FLANGE CONNECTION	
	JIS 5K
	JIS 10K

No.	Name of Parts	Materials	Q'ty	Descriptions
L22	LEVER ACTUATOR	FCD450	1set	
12	SEATRING	EPDM	1	
5	LEVER COLUMN	RESIN	1	
3	STEM	SUS420J2	1set	
2	DISC	SCS14	1	
1	BODY	ADC12	1	

TEST PRESSURE	
BODY (Water)	1.5 MPa
SEAT (Water)	1.1 MPa

CONDENSATION MEASURES JIS B 2032 CONFORMITY PRODUCT LEVER-TYPE ALUMINIUM BUTTERFLY VALVES	FIGURE YZT

Approval	Check	Drawing	Date	Scale
	Y.TAKEUCHI	T.KOZAI	2015. 4.27	

Yamato Valve Co.,Ltd. 図番 Drawing No. YZT-62598-A